UF15K(C) Series

Size : 172 x 150 x 55
Unit : mm

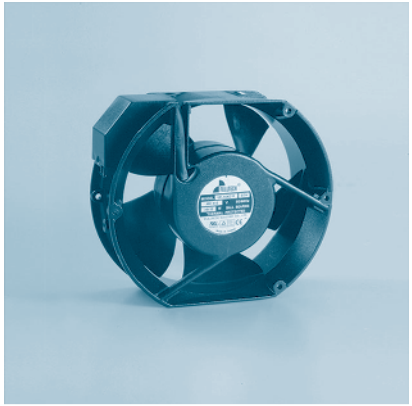

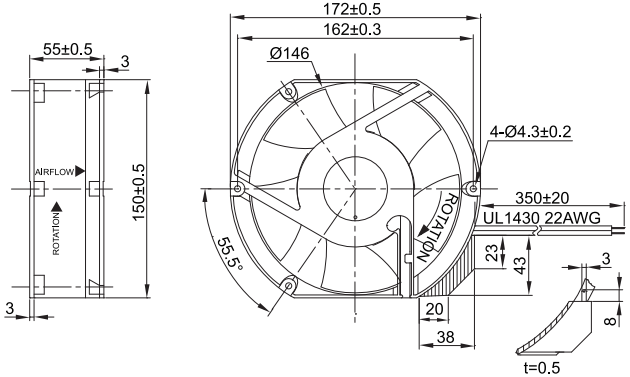

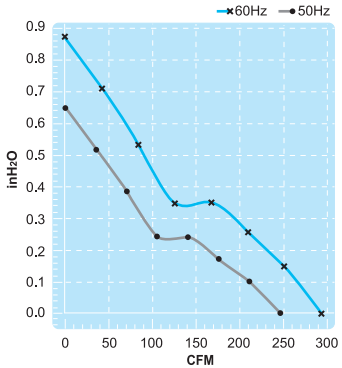

Thermally-Protected

Terminal or Lead Wire Type

E136370 E136370

Spec. / Model	Rated Voltage V	Frequency Hz	Input Power W	Rated Current A	Locked Current A	Speed RPM	Maximum Air Flow m^3/min.	Maximum Air Flow CFM	Maximum Pressure mmH_2O	Maximum Pressure $InchH_2O$	Noise dB	Weight kg
UF15KC11-H	115V	50	39	0.38	0.750	2900	6.8	240	17	0.67	55	1.05
		60	38	0.34	0.760	3400	8.3	293	23	0.90	60	
UF15KC23-H	230V	50	38	0.18	0.380	2900	6.8	240	17	0.67	55	1.05
		60	38	0.17	0.380	3400	8.3	293	23	0.90	60	